DYNASONICS

Series D300/301

Doppler Ultrasonic Flow Meter

Operations & Maintenance
Manual

REV 2/00

PART 1 - TABLE OF CONTENTS

Description	*Pages*
Quick Start Installation	1.2-1.3
Operating Theory	1.4
Product Limitations	1.5
Model Number Matrix	1.6
Specifications	1.7
Pre-Installation Bench Test	2.1
Transducer Installation	2.2-2.6
Transmitter Installation	3.1-3.2
Electrical Connections	3.2-3.5
Power Up and Configuration	4.1
Field Calibration	4.2-4.5
Relay Adjustment	4.5
Changing Pipe Size or Flow Span	4.6-4.7
Appendix	
Fluid Sound Speed Conversions	
Ductile Iron Pipe Data	
Cast Iron Pipe Data	
Steel, SS, PVC Pipe Data	
FPS to GPM Conversion Chart	
Intrinsic Safety Installation	
Troubleshooting Waveforms Ref.	
Statement of Warranty	
Service Information	

PART 1 - QUICK START

General

This manual contains detailed operating instructions for all aspects of the D300/301 instrument. The following condensed instructions are provided to assist the operator in getting the instrument started up and running as quickly as possible. This pertains to basic operation only. If specific instrument features are to be used or if the installer is unfamiliar with this type of instrument, refer to the appropriate section in the manual for complete details.

1. TRANSDUCER LOCATION

A. In general, select a mounting location on the piping system with a minimum of 10 pipe diameters (10 X the pipe inside diameter) of straight pipe upstream and 5 straight diameters downsteam. See Table 2.1 for additional configurations.

B. On horizontal pipe, select a position that is between 2 and 4 o'clock on the pipe, with 12 o'clock representing the top.

2. PIPE PREPARATION AND TRANSDUCER MOUNTING

A. The piping surface, where the transducers are to be mounted, needs to be clean and dry. Remove loose scale, rust and paint to ensure satisfactory acoustical bonds.

B. Loosely wrap the appropriate length of strap around the pipe at the location determined in Step 1. Refer to Figure 1.1 for proper orientation.

C. Apply a liberal amount of couplant onto the transducer face. Place the transducer onto the pipe ensuring square and true placement. If an RTV type of couplant (requiring curing time) was utilized, allow sufficient time for curing before applying power to the instrument.

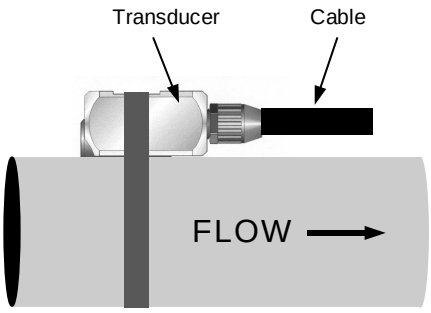

Figure 1.1
Top View of Pipe

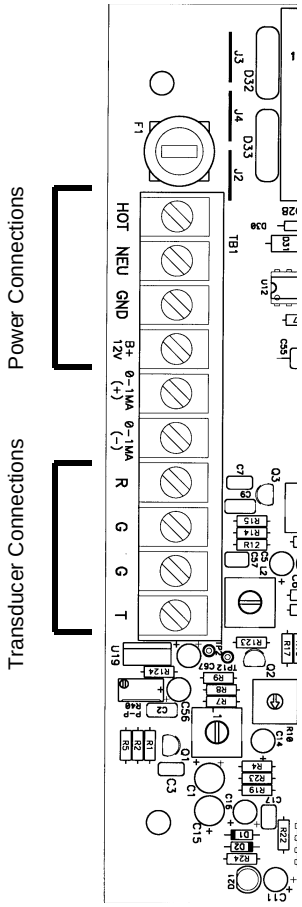

Figure 1.2
Power and Transducer Connections

3. TRANSDUCER/POWER CONNECTIONS

A. Do not attempt to add additional cable to the transducers.

B. Refer to the WIRING DIAGRAM in Figure 1.2 for proper power and transducer connections. Verify proper jumper selections are in place for the power source. See Figures 2.2 and 2.3.

4. INITIAL SETTINGS AND POWER UP

IMPORTANT!
In order to successfully complete the configuration of the D300/301 flow meter, the transducer must be mounted on a pipe which is full of a flowing liquid. It is normal to have zero readings and no signal indicator LED with empty pipes or zero flow rate.

A. Adjust the GAIN control [R10] to 1/4 turn from full counter-clockwise rotation. Set the DAMP control R110 to 1/2 turn from either stop.

B. Apply power to the instrument.

C. If the pipe is full of a flowing liquid, the LED located on the bottom of the main circuit card [D21] should begin flashing. If the LED does not flash, gradually turn the GAIN control [R10] clockwise until the LED just begins to flash steadily. (Do not over adjust this setting as ambient noise can influence readings.)

D. If possible, turn off the flow to the pipe. Verify that the LED [D21] ceases to flash. If the LED continues to flash when flow rate is zero, the GAIN control [R10] is set too far clockwise and ambient noise is influencing the readings. Turn the control counter-clockwise until the flashing ceases.

E. If the instrument passes steps 4C and 4D, the basic setup of the instrument is complete.

PART 1 - GENERAL

General

The Dynasonics D300/301 flowmeter is designed to measure the flow of liquids and slurries in full-pipe closed systems. The transmitter is factory configured to measure flow on a specific, customer specified, pipe, where flow range and measuring units have been supplied to the Dynasonics factory during assembly and factory calibration. The standard product is typically used on pipe sizes ranging from 1 - 120 inch [25 - 1524 mm] pipe I.D. (With the small pipe transducer option, the pipe size range is 0.25 - 1 inch [6 - 25 mm]). A variety of liquid applications can be accommodated: sewage, sludges, concrete, mining slurries, dredging, etc. Because the transducers are non-contacting and have no moving parts, the flow meter is not affected by system pressure, fouling or wear. Standard transducers are rated to 250°F [121°C]. Optional high temperature transducers are rated to operate to 400°F [204°C].

Operating Theory

The basic principle of operation is the measurement of the frequency shift “Doppler” of a reflected ultrasonic signal from discontinuity in the flowing liquid. In theory, these discontinuities can be virtually any amount of suspended bubbles, solids, or interfaces caused by turbulent flow. In practice the degree to which this can be reliably accomplished is a function of the sensitivity and frequency of the transducer and associated transmitter. The D300/301 design requires greater than 100 PPM of suspended solids or bubbles over 100 microns in size. Should your application be cleaner than this, please check with factory for information on transit time ultrasonic flowmeters. The transducer which generates and receives the ultrasonic signal supplies the data to the transmitter. The transmitter processes the signal and provides an analog and pulse output for velocity indicating and volumetric totalizing. In addition, the transmitter contains a signal light which determines satisfactory operation.

Measuring Limits

The flowmeter is typically used as a unidirectional meter and is most accurate when the transducer is mounted in the orientation detailed in this manual. But, the meter will measure flow in both directions — although flow direction will not be indicated or totalized properly. The flowmeter will operate from signals returned from turbulence alone (such as installation directly at pump discharges or downstream from elbows and valves); however, it should be noted that turbulence may vary with flow rates and result in non-linear results. The repeatability of the device is not dependent on most process liquids.

The flowmeter is designed to measure the flow of liquids and slurries, as long as a small, homogeneous quantity of entrained air or suspended solids are present. Without the presence of continuing supply of air or solids, the transmitted pulses are not reflected back to the transducer and the indicator will indicate zero flow. Also, the LED signal indicator will be extinguished.

The signal strength light will indicate (continuously blink) when a minimum size and concentration of suspended particles are available for a reliable flow reading (100 micron and 100 PPM minimum) and the liquid is moving at least 0.1 FPS [0.03 MPS]. Most water-based liquids can be measured from a factory calibrated flowmeter. However, liquids with a heavy solids level (i.e. over 2%), liquids with sound speeds that vary from water (see Appendix of alternate liquids list) or pipes with liners may have to be field calibrated. This is done by adjusting the span pot (R30 on circuit board) to make the indicator agree with a known flow velocity or a mathematically corrected fluid velocity. All standard indicator scales are calibrated to customer specified units. If the scale range or units need to changed, the process to do so is covered in detail later in this manual.

PART 1 - GENERAL

Serial Number

The D300/301 employs modular construction and provides electrical safety for the operator. The display face contains voltages no greater than 9 Vdc and the metal work is electrically connected to Earth Ground. The display face swings open to allow access to user connections.

The serial number and complete model number of your D300/301 is located on the inside of the transmitter's front cover. Should technical assistance be required, please provide the Dynasoncs' Customer Service Department with this information.

A part number breakdown of the transducer and transmitter portions of the flowmeter are described below.

Transmitter

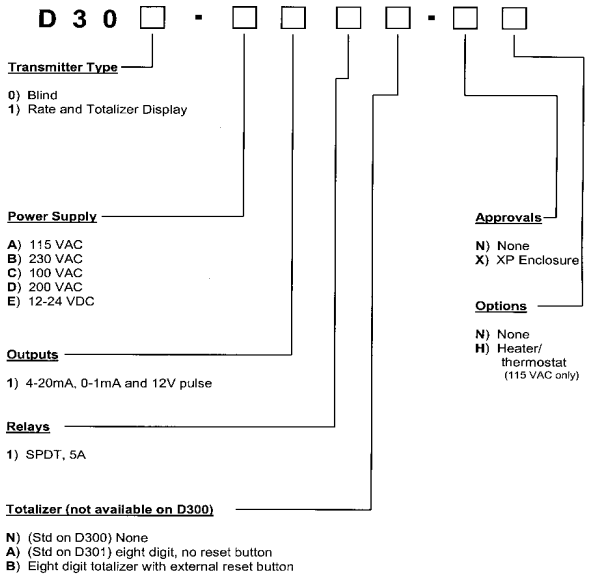

Transducer

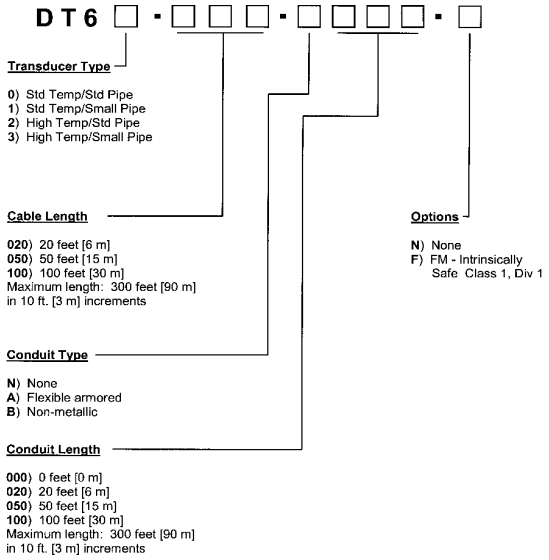

PART 1 - GENERAL

TRANSMITTER

DESCRIPTION	SPECIFICATION
POWER REQUIREMENTS	(Std) 115/230 VAC 50/60 Hz ±10% and 12VDC. (Opt) 100/200 VAC 50/60 Hz ±10%. Power consumption less than 12 VA.
VELOCITY	0.1 - 30 FPS [0.03 - 9.1 MPS]
OUTPUTS	(Std) 4-20 mA, 1000 Ohms max, isolated; 0-1 mA,1200 Ohms max; 12 VDC pulse, 100 µS duration, 10 Hz max, pulses with totalizer increments. Relay, 5A @250VAC resistive, DPDT
DISPLAY (D301 ONLY)	Rate: 4.5 Digit LCD, 0.3" [7.6mm] height Totalizer: (Std) 8 digit, non-resettable or (Opt) resettable; 0.15" [3.8mm] height
UNITS: (D301 ONLY)	Factory configured - specify when ordering
RATE U.S. [METRIC]	FPS, GPM, GPH, ft^3/M, MGD, BPM, BPH, BPD [MPS, LPM, M^3/hr, LPD]
TOTALIZER U.S. [METRIC]	Gallons, ft^3, barrels [liters, M^3]
AMBIENT CONDITIONS	-22 to 160°F [-30 to 70 °C], 0-95% relative humidity, non-condensing.
ENCLOSURE	NEMA 4X, [IP-65] Fiberglass with SS hardware. 9.5H x 7W x 4.4D inches [240H x 178W x 112D mm]
NON-LINEARITY (ACCURACY)	±2% Full Scale
SENSITIVITY	0.05% of Full Scale
REPEATABILITY	±0.2% of Full Scale
RESPONSE TIME	5-50 seconds, user configured, to 90% of value, step change in flow.
APPROVALS	(Opt) FM approval, XP, Class I, Div 1, Groups B-D; DIP, Class II, Div 1, Groups E-F

TRANSDUCER

DESCRIPTION	SPECIFICATION
LIQUID REQUIREMENTS	100 ppm of 100 micron size suspended solids or aeration minimum
TRANSDUCER TO TRANSMITTER DISTANCE	(Std) 20 feet [6.08 meters], flexible armored conduit. (Opt) lengths to 300 feet [90 meters]
PIPE SIZES	(Std) 1 - 120 inches [25 - 3050 mm] pipe I.D. (Opt) 0.25 - 1 inch [6 - 25 mm] pipe I.D.
TEMPERATURE	(Std) -40° to 250°F [-40° to 121°C] (Opt) -40° to 300°F [-40° to 149°C]
HOUSING MATERIAL	(Std) Aluminum and SS w/epoxy encapsulation
APPROVALS	(Opt) FM approval I.S., Class I, Div 1, Groups A-G. Cable lengths to 100 feet [30 meters]

PART 2 - TRANSDUCER INSTALLATION

Unpacking

After unpacking, it is recommended to save the shipping carton and packing materials in case the instrument is stored or re-shipped. Inspect the equipment and carton for damage. If there is evidence of shipping damage, notify the carrier immediately.

Bench Test

The D300/301 flow meter can be checked for basic functionality using the following **Bench Test** procedure. It is recommended that this operation be performed before installing the transducers or transmitter permanently.

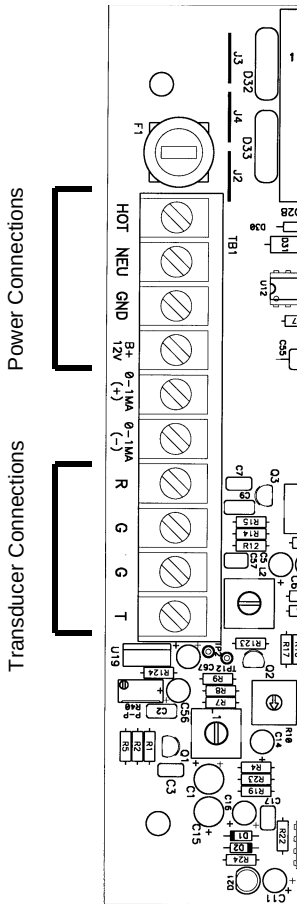

Figure 2.1
Power and Transducer Connections

<u>Procedure:</u>

1. Open the D300/301 transmitter enclosure.
2. Connect the transducer cable terminals to the corresponding terminal block locations within the transmitter. The R, T and corresponding G terminals are marked on the coaxial transducer cables. See **Figure 2.1**.
3. Set the transmitter SENSE control [R10] to approximately 1/4 turn from full clockwise position.
4. Apply power.
5. Rub the face of the transducer lengthwise back and forth with your thumb using moderate pressure. The cycle time should be 1-2 times per second.
6. If unit is functioning properly, the RED LED located on the bottom of the main circuit card will begin to flash and the rate display will indicate flow readings.
7. Verify that the LED ceases to flash when the rubbing stops.
8. If the meter does not respond, increase the SENSE control [R10] to approximately 1/2 turn from full clockwise position. Attempt Step 5 again.

Bench Test is Complete

PART 2 - TRANSDUCER INSTALLATION

Transducer Mounting Locations

The following list outlines how to install the DT6 transducer for optimal performance, highest reliability and greatest accuracy:

1. Select a transducer site at least 10 pipe diameters downstream from bends, or fittings and 5 pipe diameters upstream. A symmetrical flow pattern is necessary for accuracy and repeatability over the

Table 2.1[1]

Piping Configuration and Transducer Position	Upstream Dimension: Pipe Diameters *	Downstream Dimension: Pipe Diameters **
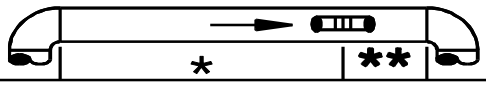	9	3
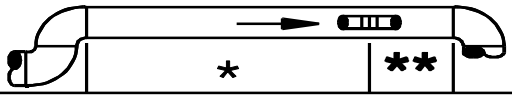	14	3
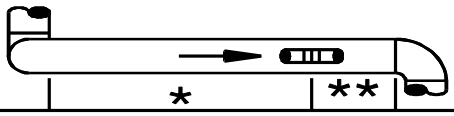	24	4
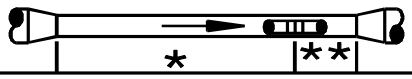	8	3
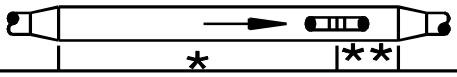	8	3
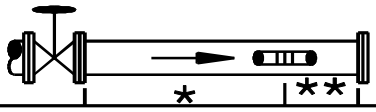	24	4

[1] *The D300/301 system will provide repeatable measurements on piping systems that do not meet these requirements, but the accuracy of these readings may be influenced to various degrees.*

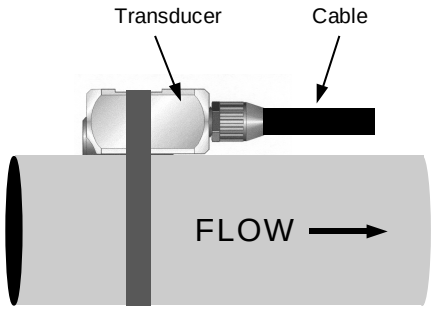

Figure 2.2
Top View of Pipe

operating range of the meter. Down stream from pump or orifices, etc., locate at least 20 diameters. See **Table 2.1**

2. On horizontal pipe, select a position that is between 2 and 4 o'clock on the pipe, with 12 o'clock representing the top. If the transducer is to be mounted on a vertical pipe, select a section of pipe where the flow is moving from bottom to top (flow moving vertically down a pipe tends to cavitate and provide unreliable operation.)
3. Mount the transducer in the orientation shown in Figure 2.2. The flow meter will read flow in both directions, but will be most accurate if the cable is mounted in the orientation shown—pointing in the primary flow direction.
4. If totalization of the measured fluid is required, the pipe must remain full. The meter will read when the liquid level is greater than the placement of the transducer, but the volumetric measurement will be based on a full pipe, so totalization will be higher than actual.
5. The flowmeter will achieve proper Doppler signals off of turbulence; however, it I should be noted that turbulence may not be linear with pump speed changes, nor is the reading necessarily accurate due to the non-uniformity of turbulence.
6. When a liquid has less than 100 PPM of 100 micron or larger particles, try mounting the transducer within 12 inches of a pump discharge or other source of flow turbulence or cavitation. A reading obtained under these circumstances will be repeatable, but not necessarily accurate or linear.
7. It is a good practice to test the flow meter on the piping system before permanently mounting the transducer using RTV. Function can be verified by applying a water soluble lubricant, such as KY-Jelly, and holding the transducer by hand on the pipe in the location where the transducer will be

permanently mounted. Under flowing liquid conditions, adequate signal is indicated when the Signal LED (D21) flashes steadily.

Acoustic Couplant Types

For proper operation, there cannot be air voids between the traducer face and pipe. The space must be filled with a material which is a good transmitter of sound energy such as:

SILICONE GREASE: Dow Corning 111 R or comparable (-100 to +450 F.) The material must be suitable not to flow at temperature of pipe. Used for temporary survey installations and portable flow meters.

SILICONE RUBBER: Dow Corning 732-RTV R. Excellent for permanent bonding. This adhesive is a recommended bonding agent and easily removable.

INSTALLATION AND PIPE PREPARATION

The cable from the DT6 transducer is provided with either dual-coaxial cables, flexible nylon conduit or PVC coated steel conduit with a 1/2" NPT fitting. The coaxial cable was ordered from the factory at a specific length **UNDER NO CIRCUMSTANCES should the coaxial cable be lengthened as this may de-tune the circuitry and influence performance**.

Small Pipe Transducers

Installation of the DT61 and DT63 small-pipe transducers follow the same procedures as the DT60 and DT62 standard pipe type. The only difference is that the small pipe transducers utilize an integral clamping mechanism for pipe mounting and the standard pipe units use a stainless steel strap.

Intrinsic Safety Installations

Installations requiring intrinsic safety should refer to the Appendix drawings covering these applications.

PART 2 - TRANSDUCER INSTALLATION

1. <u>Pipe Preparation:</u>

For permanent silicone adhesive mounting, after determining the transducer location, some attention must be given to the pipe condition. Before the transducer head is bonded to the pipe surface, an area slightly larger than the flat surface to the transducer head (black rectangle) must be cleaned to bare metal. This means the removal of all paint rust, and scale. Some minor pipe pitting will not cause problems, as the acoustic couplant will take up the voids. In the case where plastic pipe is used, remove all paint and grease so that a smooth, dry surface is exposed.

2. <u>Transducer Mounting:</u>

The transducer center line is designed to mount parallel to the pipe center line. The groove in the transducer body will allow the 1/2" stainless steel strap that was enclosed with the meter to align the transducer properly on the pipe. **<u>DO NOT</u>** mount the transducer on bends, elbows or fittings. Every effort should be made to mount the transducer parallel to the axis of the pipe as well as flat on the pipe. The transducer cable should run in the "down-stream" direction of liquid flow. See **Figure 2.2**.

In horizontal pipe runs, mount the transducer between 2 and 4 o'clock from the top—12 o'clock position; prepare the pipe surface as described. Finish the surface with some emery paper and then wipe the surface with trichlorenthylene to thoroughly degrease the contact surface in a area slightly larger than the flat surface of the transducer.

For permanent mounting, use a good silicone based adhesive (Dow-732). Spread a bead of the adhesive on the flat surface of the transducer face, covering well. Now spread a bead to the prepared pipe surface and press the head lightly to the pipe. Let the adhesive flow enough to fill in all the area beneath the

head. At the same time, clamp (clamp supplied) into place until the silicone has set up. Taping along the edges of the head will hold the adhesive in place. A pad of adhesive must be formed between the transducer face and the pipe. Ensure that no relative movement between the transducer and the pipe takes place during the setup time (about 24 hours). Clamp transducer only tight enough to hold it in place while the adhesive is curing. Tighten for mechanical strength only after 24 hours. Secure the conduit as well.

3. Temporary Mounting and Spot Checks:

For temporary mounting, clean pipe as described and use silicone grease as the acoustical coupling material, holding by hand for spot readings or with a strap clamp for indefinite periods.

PART 3 - TRANSMITTER INSTALLATION

Installation of Transmitter Box

The enclosure should be mounted in an area that is convenient for servicing, calibration or for observation of the LCD readout.

1. Locate the transmitter within the length of transducer cable that was supplied with the D300/301 system. If this is not possible, do not attempt to add additional cable to the transducer. Contact the Dynasonics factory to coordinate an exchange for the proper cable length. Transducer cables that are up to 300 feet [90 meters] are available.

2. Mount the D300/301 transmitter in a location that is:

- Where little vibration exist.
- Protected from falling corrosive fluids.
- Within ambient temperature limits - 22 to 122°F [30 to 50°C]
- Out of direct sunlight. Direct sunlight may increase temperatures within the transmitter to above maximum limit.

3. Mounting: Refer to **Figure 3.1** for enclosure and mounting dimension details. Ensure that enough room is available to allow for door swing, maintenance and conduit entrances. Secure the enclosure to a flat surface with four appropriate fasteners.

4. Conduit holes. Conduit hubs should be used where cables enter the enclosure. Holes not used for cable entry should be sealed with plugs.

NOTE: Use NEMA 4 [IP65] rated fittings plugs to maintain the water tight integrity of the enclosure. Generally, the left conduit hole (viewed from front) is

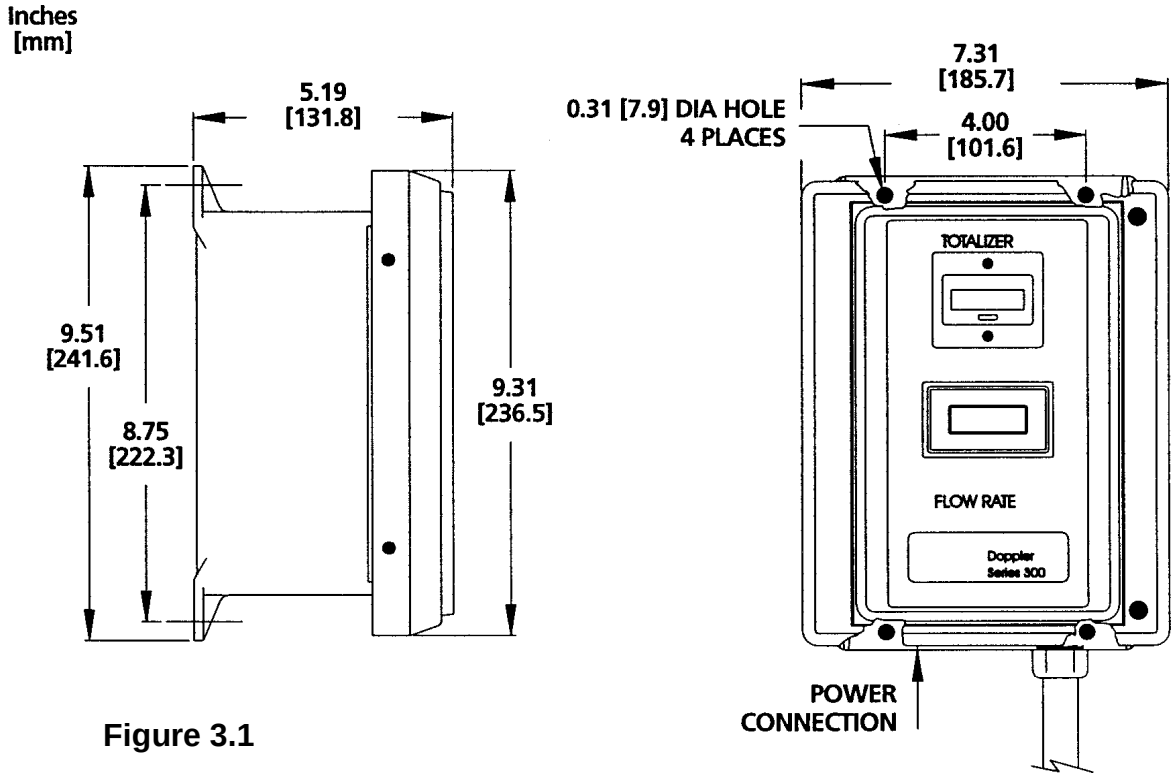

Figure 3.1

used for line power; the right conduit hole for transducer connections.

5. If additional holes are required, (analog outputs, etc.) drill the appropriate size hole in the enclosure's bottom. Use extreme care not to run the drill bit into the wiring or circuits cards.

Electrical Connections

1. To access terminal strips for electronic connections, loosen the two screws in the enclosure door and open the door.
2. Guide the transducer terminations through the transmitter conduit hole located on the right side of the enclosure. Secure the transducer cable with the supplied conduit nut.
3. The terminals on the transducer cable are coded

with wire markings. Connect the appropriate wires to the corresponding screw terminals in the transmitter. See the electrical connections detail in **Figure 3.2 and 3.3**.

NOTE: The transducer cable carries low level signals. Do not attempt to add additional cable to the factory supplied transducer cable. If additional cable is required, contact the Dynasonics factory to arrange for an exchange transducer with the appropriate length of cable. Cables to 300 feet [90 meters] are available.

Figure 2.2 D301/300 Operated with 115/230 VAC Power Supply

02/02/2000

Power Supply Jumper Placement

115 Vac	J2 and J3 only
230 Vac	J4 only
12-24 Vdc	Does not matter

Fuse

115/230 Vac	1/16A 3AG Delay Action

AC Power Connections
115/230 Vac 50/60 Hz clean AC power required. Do not connect in parallel with circuits operating florescent lighting, valves, control relays, VFDs, etc. GND connection is optional. If GND is connected, verify that it is at the same potential as the piping system.

0-1 mA Output Connection
This output is designed to drive loads up to 1500 ohms. Use R60 [1mA] control to adjust span.

Transducer Connections
Connect the four wires from the two coaxial cables to the respective terminals. Wire markers on the coaxial cables identify the “R” and the “T” pair. Do not run these cables adjacent to AC power cables.

R10 [GAIN] Control
After all electrical and transducer connections have been made, the GAIN control is set to match liquid and pipe parameters. To properly set the R10 [GAIN], the pipe must be full of a flowing liquid. Start with the control fully CCW [counter clockwise]. Adjust CW until D21 [the LED] just begins to flash steadily.

LOW Velocity Filter
For measuring fluid velocities up to 20 FPS [6 MPS] set the two switches at SW2 to OPEN. If continuous flow rate will not exceed 2 FPS [0.6 MPS] turn the two switches ON.

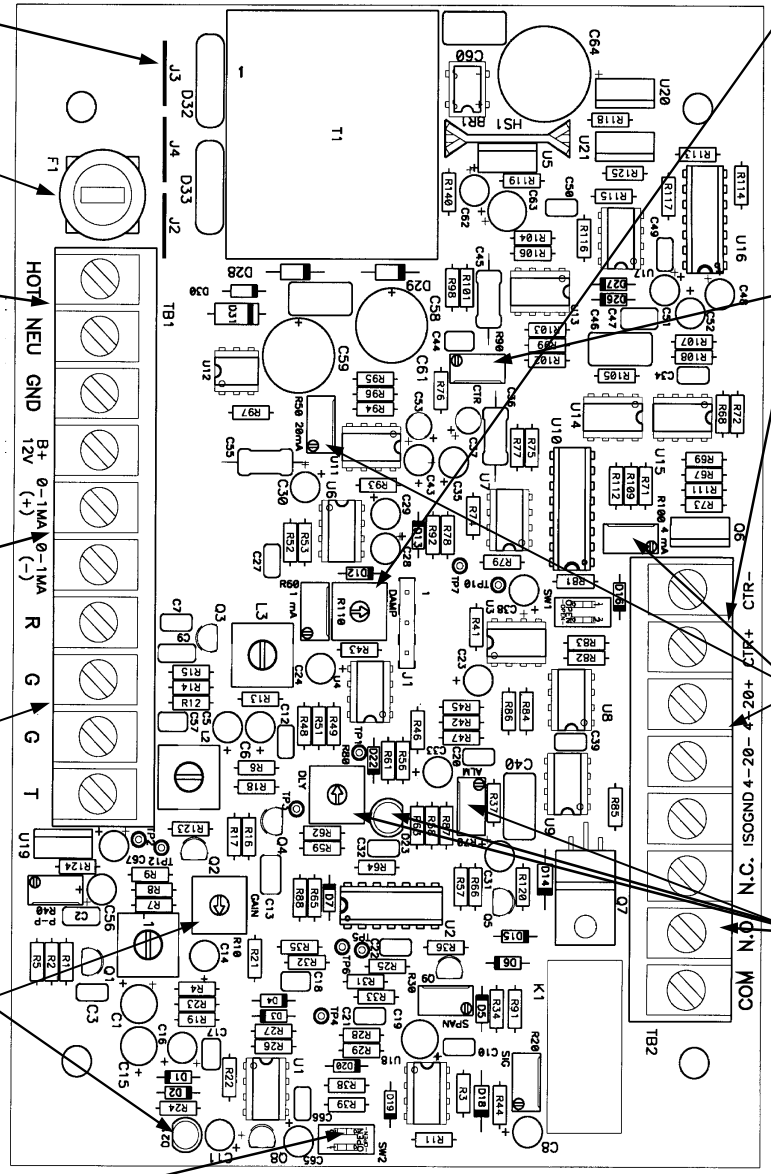

R110 [DAMP] Control
Adjust R110 [DAMP] to stabilize flow rate and output readings. Adjust CCW to increase the response of the instrument; adjust CW to decrease response time (smooth the display readings and outputs).

CTR Output Connections
The CTR output is designed to operate both electronic and electromechanical totalizers. The output can drive loads as low as 90 ohms. Control R90 [CTR] adjusts the span of this output. Switch set SW1 controls the CTR output by factors of X10. See details in the manual describing CTR adjustment.

Isolated 4-20mA Output Connections
There are two methods to connect this output:

- When the D300/D301 is powered from AC power sources, 24 Vdc of isolated power is available at the 4-20mA+ terminal. Simply connecting the target’s (chart recorder, data logger, ADC) 4-20mA+ and 4-20mA– inputs to these two output terminals will drive 4-20mA through 1000 ohms.
- If the target’s internal DC power source is utilized to power the 4-20mA loop, Connect the ISOGND terminal to the target’s ground and the target’s 4-20mA input to the 4-20mA– terminal.

Control R100 [4mA] is used to adjust 4mA offset and R50 [20mA] to adjust 20mA span.

Flow Rate Relay Connections
The D300/D301 is equipped with a flow rate control relay. The relay is designed to control loads to 250 Vac and 10A. The relay activates when the flow rate is less than the set point. Activation is indicated by D23 [LED]. The relay setpoint is controlled by adjusting R70 [ALM] there is also a alarm delay feature that requires the alarm condition to be present for a period of time before relay activation. The delay can be increased by adjusting R80 [DELAY] CW.

Figure 2.3 D301/300 Operated with 12-24 Vdc Power Supply

02/02/2000

Power Supply Jumper Placement

12-24 Vdc Does not matter

Fuse

The fuse provides protection for AC powered units only. DC power sources should be connected with a 0.25A current limiter [fuse] in the positive supply line.

12-24 Vdc Power Connections

Connect a DC power source capable of sourcing 0.2A to the terminals marked +B/12V and GND. The DC power source will operate all functions of the D300/D301 except the isolated 4-20mA output. See the box describing Isolated 4-20mA Output for connection details.

0-1 mA Output Connection

This output is designed to drive loads up to 1500 ohms. Use R60 [1mA] control to adjust span.

Transducer Connections

Connect the four wires from the two coaxial cables to the respective terminals. Wire markers on the coaxial cables identify the "R" and the "T" pair. Do not run these cables adjacent to AC power cables.

R10 [GAIN] Control

After all electrical and transducer connections have been made, the GAIN control is set to match liquid and pipe parameters. To properly set the R10 [GAIN], the pipe must be full of a flowing liquid. Start with the control fully CCW [counter clockwise]. Adjust CW until D21 [the LED] just begins to flash steadily.

LOW Velocity Filter

For measuring fluid velocities up to 20 FPS [6 MPS] set the two switches at SW2 to OPEN. If continuous flow rate will not exceed 2 FPS [0.6 MPS] turn the two switches ON.

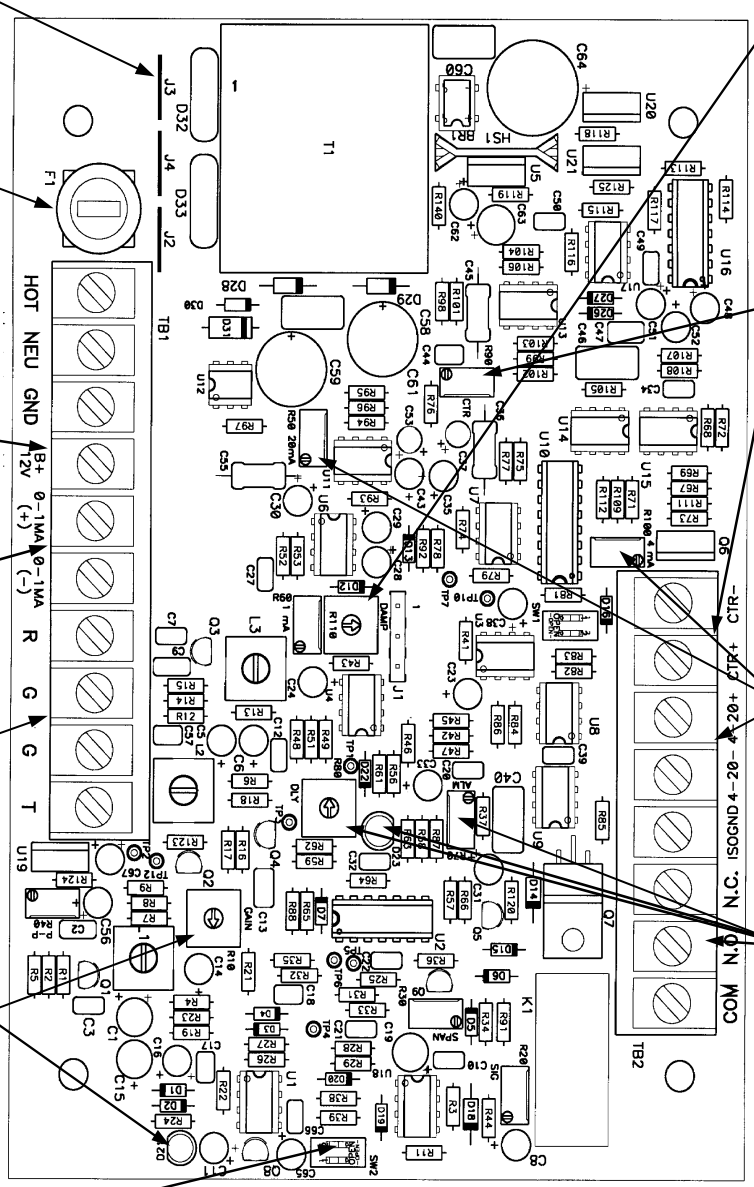

R110 [DAMP] Control

Adjust R110 [DAMP] to stabilize flow rate and output readings. Adjust CCW to increase the response of the instrument; adjust CW to decrease response time (smooth the display readings and outputs).

CTR Output Connections

The CTR output is designed to operate both electronic and electromechanical totalizers. The output can drive loads as low as 90 ohms. Control R90 [CTR] adjusts the span of this output. Switch set SW1 controls the CTR output by factors of X10. See details in the manual describing CTR adjustment.

Isolated 4-20mA Output Connections

There are two methods to connect this output:

- To operate the 4-20mA loop from the same DC supply operating the flow meter, connect jumper wires from +B/12V to 4-20+ and from GND to ISOGND. Connect the 4-20mA loop load between 4-20+ and 4-20-.
- If the target's (chart recorder, datalogger, etc.) internal DC power source is utilized to power the 4-20mA loop, Connect the ISOGND terminal to the target's ground, the target's +DC output to 4-20+ terminal and the target's 4-20mA input to the 4-20mA– terminal.

Control R100 [4mA] is used to adjust 4mA offset and R50 [20mA] to adjust 20mA span.

Flow Rate Relay Connections

The D300/D301 is equipped with a flow rate control relay. The relay is designed to control loads to 250 Vac and 10A. The relay activates when the flow rate is less than the set point. Activation is indicated by D23 [LED]. The relay setpoint is controlled by adjusting R70 [ALM] there is also a alarm delay feature that requires the alarm condition to be present for a period of time before relay activation. The delay can be increased by adjusting R80 [DELAY] CW.

PART 4 - CONFIGURATION AND OPERATION

Power Up and GAIN Adjustment

After power has been applied to the flowmeter and if the pipe is full of a flowing liquid, the LED located on the bottom of the main circuit card [D21] should begin flashing. If the LED does not flash, gradually turn the GAIN control [R10] clockwise until the LED just begins to flash steadily. (Do not over adjust this setting as ambient noise can influence readings.)

If possible, turn off the flow to the pipe. Verify that the LED [D21] ceases to flash. If the LED continues to flash when flow rate is zero, the GAIN control [R10] is set too far clockwise and ambient noise is influencing the readings. Turn the control counter-clockwise until the flashing ceases. The indicated flow will take several seconds to achieve the desired reading because of the built-in electronic damping circuits.

The flow rate meter is factory calibrated to the pipe size and flow range indicated on the label located on the inside front cover of the flow meter.

Totalizer - Series 301 only

Each digit will be in a volumetric unit x 10, x 100, x 1000 or x10,000 as set by SW 1. The totalizer multiplier that was set at the factory will be indicated on the label adjacent to the totalizer display. By changing this switch setting, the totalizer label, located by the totalizer indicator on the front cover of the flow meter, will need to be adjusted accordingly.

SW 1—Totalizer Multiplier

SW1-1	SW1-2	MULTIPLIER
OFF	OFF	X 10
ON	OFF	X 100
OFF	ON	X 1000
ON	ON	X 10000

FIELD CALIBRATION PROCEDURES

After the Equipment is properly installed and operating, there may be a need to field calibrate the flowmeter. This could be caused by a number of reasons:

1. Using a size pipe other than the one specified when factory configured.
2. When used to measure a liquid with a sound speed that is different than the one specified when factory configured.
3. When proper lengths of straight pipe are not available.
4. Percent of solids are greater than 2%.
5. Operating off turbulence or non-linear suspended solids.

Field Calibration Procedure

Field Calibration is as follows:

A. To calibrate the flow rate indicators (meter) against a known flow:

1. With an established flow, the digital readout and/ or current outputs on D300/301 can be adjusted in accordance with a verified flow measurement, by adjusting pot R30 (SPAN) adjustment. Turning the pot C.C.W. decreases the reading. This is a 20 turn, stop-less potentiometer. (Note: Pot R60 will adjust the 0-1 mA output only).
2. It is desired to adjust 4-20 mA to other than factory calibration, pot R50 can be used to adjust the 20 mA span.
3. Adjust damping pot R110 for desired flow response. CW rotation increases flow damping. The total flow damping range can be varied from about 5 seconds to 50 seconds. This setting is usually used to smooth out chart recorder readings.

B. Totalizer Calibration — Series 301

1. If an oscilloscope or signal counter is available, a signal from test point TP10 will show the totalizer count rate at a particular flow. Refer to the drawing in the Appendix titled 091-1048-102 Series 300 Waveforms. The pulse rate at TP10 can be x 10, x 100, x 1000 or x10,000 of totalizer count rate, at the CTR output on terminal strip. For example, if the pulse rate is 200 milliseconds (multiplier switch SW 1 programmed for 100), then the counter rate at CTR terminals will be scaled to provide a count every 20 seconds. The total counter output (CTR) range can be adjusted from approximately 0.5 to 5 seconds with a full scale flow indication.

Totalizer Adjustment:

(CTR CAL) - (pot R90 and DIP SW 1). The multiplier DIP switch SW 1 may be programmed as follows:

SW 1 Position

SW1-1	SW1-2	MULTIPLIER
OFF	OFF	X 10
ON	OFF	X 100
OFF	ON	X 1000
ON	ON	X 10000

If an oscilloscope or signal counter is not available, then use the following procedure. The Pot R90 has a range of 0.5 to 5 seconds. SW1 is then used to increase this rate all the way up to 50 minutes.

2. Stopwatch Procedure - with a known flow rate established on the flow meter digital display, time the count rate on the totalizer by a stopwatch, measuring the time between totalizer counts. If the totalizer is reading lower than desired, turn CTR, CAL pot R90

C.W. Time the new rate and adjust as required. For example, if the flow indicator reads 1,000 GPM and a totalizer count rate of 1 count every 60 seconds should be displayed. If the actual count rate is one count every 50 seconds, then turn the adjustment R90 slightly (with SW 1 Position x 1,000) C.C.W. to decrease the count rate until there is one count on the totalizer every 60 seconds when the flow rate indicator is reading 1,000 GPM. As noted above, 20 full turns on R90 will produce a variation in count rate of at least x 10, or from approximately 50 to 500 seconds when the indicator is reading full scale. To determine count rate:

$$\text{Count rate} = \frac{60\ (TM)}{GPM}$$

Where,
TM = totalizer multiplier or gallons x totalizer counts
GPM = flow at time of calibration

Electronic Calibration

The flowmeter is electronically calibrated at the factory by calculating the fluid velocity in Feet per Second (FPS) that corresponds to the pipe size and volumetric flow rate that was customer supplied at the time of the order. The following equations were used to determine the “calibration frequency” that is required to properly span the flow meter.

$$FPS = \frac{GPM}{(\text{PIPE I.D.})^2 \times 2.45}$$

Where

PIPE I.D. is inches

A DT6 transducer generates 120 Hz / 1 FPS of frequency shift when operated on room temperature water. Alternate fluids can influence this factor. See

the Fluid Sound Speed Compensation chart located in the Appendix of this manual.

Once a new calibration frequency has been determined, the frequency is input as a 1 Vpp sine-wave into TP3 on the main circuit card. This input will simulate full scale flow in the circuit. With the function generator inputting the calibration frequency the SPAN, 1mA, 20mA and CTR inputs can be configured. A 10% and 50% of SPAN frequency can be input and flow meter linearity can be verified.

Noise and Gain Adjust

If meter indicates a reading with no flow, turn R10 (GAIN) C.C.W. just enough to eliminate. Since this reduces sensitivity, do not turn past point of proper operation. If indicator will not read flow, turn R10 (GAIN) C.W.

Relay Adjustment

1. Turn R80 (DLY) fully CCW for minimum delay (2 sec.) before proceeding with alarm trip adjustments.
2. For a point of reference, turn R70 (ALM) also fully CCW.
3. At the desired flow dropout (which can be simulated by the procedure covered in the Electronic Calibration Procedure on Page 4.4), slowly (due to time delay) adjust alarm R70 (ALM) CW until relay is deactivated. Do not overturn. **NOTE:** About 10% flow hysteresis is built-in into the flow switch system at 1 FPS.
4. After a desired alarm trip point is established, adjust R80 (DLY) CW for a desired time delay (20 sec. Max. On flow dropouts).

HOW TO CALIBRATE FOR A DIFFERENT SCALE & PIPE

This procedure is an outline of how to re-scale the series D300/301 flow meter.

1. The first step is to determine the full scale velocity setting. To determine this you would need the full scale setting (i.e. GPM, MGD etc) and the pipe inside diameter (refer to the charts in the Appendix).

Example calculation: Full scale 500 GPM. Pipe size: 4.026 inches I.D.

$$\text{Feet per Second} = \frac{500\ \text{GPM}}{(4.026)^2 \times 2.45} = 12.755\ \text{FPS}$$

2. Multiply the Full Scale in FPS by 120 Hertz. 12.755 * 120 = 1530 Hertz.

3. As described in the Electronic Calibration section on page 4.4 of this operations manual, input a 1Vpp sine-wave at 1530 Hz into TP3 to simulate full scale flow.

4. Adjust R30 (SPAN) for 5.0 VDC at TP7. On A D301 meter adjust the digital indicator located on the door of the instrument. The adjustments for the scaling on the digital indicator are also labeled SPAN. The fine adjustment on the digital indicator is labeled CAL. Use both of these adjustments to correctly set the indicator.

5. On a D301 equipped with a totalizer the new count rate would be determined by the following example:

60/500 = 0.12 sec per count. In this example it has been determined that 1 count at .12 sec per count is equal to 1 gallon. Since 0.12 seconds is too fast for the electronic circuit design (i.e. 0.5 sec minimum setting), the decimal place is moved over one and

the new count rate is 1.2 seconds per count at 10 gallons per count.

A digital counter is placed on the output of the circuit card to measure the period between pulses so that at a full scale of 500 GPM the CTR adjustment is set to correspond to a 1.2 second period interval. The SW1 switch is only used if the customer wishes to set the gallons per count rate higher (i.e. x 10, x 100, x 1000).

Ductile Iron Pipe

Standard Classes

Pipe Size (inches)	Outside Diameter (inches)	Class 50		Class 51		Class 52		Class 53		Class 54		Class 55		Class 56		Cement Lining Std./Double Thickness
		ID	Wall	ID	Wall	ID	Wall	ID	Wall	ID	Wall	ID	Wall	ID	Wall	
3	3.96			3.46	0.25	3.40	0.28	3.34	0.31	3.28	0.34	3.22	0.37	3.14	0.41	
4	4.80			4.28	0.26	4.22	0.29	4.16	0.32	4.10	0.35	4.04	0.38	3.93	0.44	
6	6.90	6.40	0.25	6.34	0.28	6.28	0.31	6.22	0.34	6.16	0.37	6.10	0.40	6.04	0.43	.123/.250
8	9.05	8.51	0.27	8.45	0.30	8.39	0.33	8.33	0.36	8.27	0.39	8.21	0.42	8.15	0.45	
10	11.10	10.32	0.39	10.46	0.32	10.40	0.35	10.34	0.38	10.28	0.41	10.22	0.44	10.16	0.47	
12	13.20	12.58	0.31	12.52	0.34	12.46	0.37	12.40	0.40	12.34	0.43	12.28	0.46	12.22	0.49	
14	15.30	14.64	0.33	14.58	0.36	14.52	0.39	14.46	0.42	14.40	0.45	14.34	0.48	14.28	0.51	
16	17.40	16.72	0.34	16.66	0.37	16.60	0.40	16.54	0.43	16.48	0.46	16.42	0.49	16.36	0.52	
18	19.50	18.80	0.35	18.74	0.38	18.68	0.41	18.62	0.44	18.56	0.47	18.50	0.50	18.44	0.53	.1875/.375
20	21.60	20.88	0.36	20.82	0.39	20.76	0.42	20.70	0.45	20.64	0.48	20.58	0.51	20.52	0.54	
24	25.80	25.04	0.38	24.98	0.41	24.92	0.44	24.86	0.47	24.80	0.50	24.74	0.53	24.68	0.56	
30	32.00	31.22	0.39	31.14	0.43	31.06	0.47	30.98	0.51	30.90	0.55	30.82	0.59	30.74	0.63	
36	38.30	37.44	0.43	37.34	0.48	37.06	0.62	37.14	0.58	37.40	0.45	36.94	0.68	36.84	0.73	
42	44.50	43.56	0.47	43.44	0.53	43.32	0.59	43.20	0.65	43.08	0.71	42.96	0.77	42.84	0.83	.250/.500
48	50.80	49.78	0.51	49.64	0.58	49.50	0.65	49.36	0.72	49.22	0.79	49.08	0.86	48.94	0.93	
54	57.10	55.96	0.57	55.80	0.65	55.64	0.73	55.48	0.81	55.32	0.89	55.16	0.97	55.00	1.05	

March, 2000

Cast Iron Pipe

Standard Classes

	CLASS A			CLASS B			CLASS C			CLASS D			CLASS E			CLASS F			CLASS G			CLASS H		
Size (Inches)	O.D. Inch	I.D. Inch	Wall	O.D. Inch	I.D. Inch	Wall	O.D. Inch	I.D. Inch	Wall	O.D. Inch	I.D. Inch	Wall	O.D. Inch	I.D. Inch	Wall	O.D. Inch	I.D. Inch	Wall	O.D. Inch	I.D. Inch	Wall	O.D. Inch	I.D. Inch	Wall
3	3.80	3.02	0.39	3.96	3.12	0.42	3.96	3.06	0.45	3.96	3.00	0.48												
4	4.80	3.96	0.42	5.00	4.10	0.45	5.00	4.04	0.48	5.00	3.96	0.52												
6	6.90	6.02	0.44	7.10	6.14	0.48	7.10	6.08	0.51	7.10	6.00	0.55	7.22	6.06	0.58	7.22	6.00	0.61	7.38	6.08	0.65	7.38	6.00	0.69
8	9.05	8.13	0.46	9.05	8.03	0.51	9.30	8.18	0.56	9.30	8.10	0.60	9.42	8.10	0.66	9.42	8.10	0.66	9.60	8.10	0.75	9.60	8.00	0.8
10	11.10	10.10	0.50	11.10	9.96	0.57	11.40	10.16	0.62	11.40	10.04	0.68	11.60	10.12	0.74	11.60	10.00	0.80	11.84	10.12	0.86	11.84	10.00	0.92
12	13.20	12.12	0.54	13.20	11.96	0.62	13.50	12.14	0.68	13.50	12.00	0.75	13.78	12.14	0.82	13.78	12.00	0.89	14.08	12.14	0.97	14.08	12.00	1.04
14	15.30	14.16	0.57	15.30	13.98	0.66	15.65	14.17	0.74	15.65	14.01	0.82	15.98	14.18	0.90	15.98	14.00	0.99	16.32	14.18	1.07	16.32	14.00	1.16
16	17.40	16.20	0.60	17.40	16.00	0.70	17.80	16.20	0.80	17.80	16.02	0.89	18.16	16.20	0.98	18.16	16.00	1.08	18.54	16.18	1.18	18.54	16.00	1.27
18	19.50	18.22	0.64	19.50	18.00	0.75	19.92	18.18	0.87	19.92	18.00	0.96	20.34	18.20	1.07	20.34	18.00	1.17	20.78	18.22	1.28	20.78	18.00	1.39
20	21.60	20.26	0.67	21.60	20.00	0.80	22.06	20.22	0.92	22.06	20.00	1.03	22.54	20.24	1.15	22.54	20.00	1.27	23.02	20.24	1.39	23.02	20.00	1.51
24	25.80	24.28	0.76	25.80	24.02	0.89	26.32	24.22	1.05	26.32	24.00	1.16	26.90	24.28	1.31	26.90	24.00	1.45	27.76	24.26	1.75	27.76	24.00	1.88
30	31.74	29.98	0.88	32.00	29.94	1.03	32.40	30.00	1.20	32.74	30.00	1.37	33.10	30.00	1.55	33.46	30.00	1.73						
36	37.96	35.98	0.99	38.30	36.00	1.15	38.70	35.98	1.36	39.16	36.00	1.58	39.60	36.00	1.80	40.04	36.00	2.02						
42	44.20	42.00	1.10	44.50	41.94	1.28	45.10	42.02	1.54	45.58	42.02	1.78												
48	50.50	47.98	1.26	50.80	47.96	1.42	51.40	47.98	1.71	51.98	48.00	1.99												
54	56.66	53.96	1.35	57.10	54.00	1.55	57.80	54.00	1.90	58.40	53.94	2.23												
60	62.80	60.02	1.39	63.40	60.06	1.67	64.20	60.20	2.00	64.82	60.06	2.38												
72	75.34	72.10	1.62	76.00	72.10	1.95	76.88	72.10	2.39															
84	87.54	84.10	1.72	88.54	84.10	2.22																		

March, 2000

DYNASONICS

Steel, Stainless Steel, P.V.C.

Standard Schedules

Nominal Pipe Size Inches	OUTSIDE DIAMETER	SCH. 5		SCH. 10 (LTWALL)		SCH. 20		SCH. 30		STD.		SCH. 40		SCH. 60		X STG.		SCH. 80		SCH. 100		SCH. 120		SCH. 140		SCH. 180	
		ID	Wall	ID	Wall	ID	Wall	ID	Wall	ID	Wall	ID	Wall	ID	Wall	ID	Wall	ID	Wall	ID	Wall	ID	Wall	ID	Wall	ID	Wall
1	1.315	1.185	0.065	1.097	0.109					1.049		1.049	0.133			0.957	0.179	0.957	0.179							0.815	0.250
1.25	1.660	1.530	0.065	1.442	0.109					1.380		1.380	0.140			1.278	0.191	1.278	0.191							1.160	0.250
1.5	1.900	1.770	0.065	1.682	0.109					1.610		1.610	0.145			1.500	0.200	1.500	0.200							1.338	0.281
2	2.375	2.245	0.065	2.157	0.109					2.067		2.067	0.154			1.939	0.218	1.939	0.218							1.687	0.344
2.5	2.875	2.709	0.083	2.635	0.120					2.469		2.469	0.203			2.323	0.276	2.323	0.276							2.125	0.375
3	3.500	3.334	0.083	3.260	0.120					3.068		3.068	0.216			2.900	0.300	2.900	0.300							2.624	0.438
3.5	4.000	3.834	0.083	3.760	0.120					3.548		3.548	0.226			3.364	0.318	3.364	0.318								
4	4.500	4.334	0.083	4.260	0.120					4.026	0.237	4.026	0.237			3.826	0.337	3.826	0.337			3.624	0.438	3.624	0.438	3.438	0.531
5	5.563	5.345	0.109	5.295	0.134					5.047	0.258	5.047	0.258			4.813	0.375	4.813	0.375			4.563	0.500	4.563	0.500	4.313	0.625
6	6.625	6.407	0.109	6.357	0.134					6.065	0.280	6.065	0.280			5.761	0.432	5.761	0.432			5.501	0.562	5.501	0.562	5.187	0.719
8	8.625	8.407	0.109	8.329	0.148	8.125	0.250	8.071	0.277	7.981	0.322	7.981	0.322	7.813	0.406	7.625	0.500	7.625	0.500	7.437	0.594	7.187	0.719	7.187	0.719	6.183	1.221
10	10.750	10.482	0.134	10.42	0.165	10.25	0.250	10.13	0.310	10.02	0.365	10.020	0.365	9.750	0.500	9.750	0.500	9.562	0.594	9.312	0.719	9.062	0.844	9.062	0.844	8.500	1.125
12	12.750	12.420	0.165	12.39	0.180	12.25	0.250	12.09	0.330	12.00	0.375	11.938	0.406	11.626	0.562	11.750	0.500	11.370	0.690	11.060	0.845	10.750	1.000	10.750	1.000	10.120	1.315
14	14.000			13.50	0.250	13.37	0.315	13.25	0.375	13.25	0.375	13.124	0.438	12.814	0.593	13.000	0.500	12.500	0.750	12.310	0.845	11.810	1.095	11.810	1.095	11.180	1.410
16	16.000			15.50	0.250	15.37	0.315	15.25	0.375	15.25	0.375	15.000	0.500	14.688	0.656	15.000	0.500	14.310	0.845	13.930	1.035	13.560	1.220	13.560	1.220	12.810	1.595
18	18.000			17.50	0.250	17.37	0.315	17.12	0.440	17.25	0.375	16.876	0.562	16.564	0.718	17.000	0.500	16.120	0.940	15.680	1.160	15.250	1.375	15.250	1.375	14.430	1.785
20	20.000			19.50	0.250	19.25	0.375	19.25	0.375	19.25	0.375	18.814	0.593	18.376	0.812	19.000	0.500	17.930	1.035	17.430	1.285	17.000	1.500	17.000	1.500	16.060	1.970
24	24.000			23.50	0.250	23.25	0.375	23.25	0.375	23.25	0.375	22.626	0.687	22.126	0.937	23.000	0.500	21.560	1.220	20.930	1.535	20.930	1.535	20.930	1.535	19.310	2.345
30	30.000			29.37	0.315	29.00	0.500	29.00	0.500	29.25	0.375	29.250	0.375			29.000	0.500										
36	36.000			35.37	0.315	35.00	0.500	35.00	0.500	35.25	0.375	35.250	0.375			35.000	0.500										
42	42.000									41.25	0.375	41.250	0.375			41.000	0.500										
48	48.000									47.25	0.375	47.250	0.375			47.000	0.500										

DYNASONICS

FPS TO GPM CROSS - REFERENCE (Schedule 40)

Nominal Pipe (Inches)	I.D. INCH	1	1.5	2	2.5	3	3.5	4	4.5	5	5.5	6	6.5	7	7.5	8	8.5	9
1	1.05	2.6989	4.0484	5.3978	6.7473	8.097	9.4462	10.796	12.145	13.490	14.844	16.190	17.540	18.890	20.240	21.590	22.941	24.290
1.25	1.38	4.6620	6.9929	9.3239	11.655	13.99	16.317	18.648	20.979	23.310	25.641	27.970	30.300	32.630	34.960	37.300	39.627	41.958
1.5	1.61	6.3454	9.5182	12.691	15.864	19.04	22.209	25.382	28.555	31.730	34.900	38.070	41.250	44.420	47.590	50.760	53.936	57.109
2	2.07	10.489	15.734	20.979	26.224	31.47	36.713	41.958	47.202	52.450	57.692	62.940	68.180	73.430	78.670	83.920	89.160	94.405
2.5	2.47	14.935	22.402	29.870	37.337	44.80	52.272	59.740	67.207	74.670	82.142	89.610	97.080	104.50	112.00	119.50	126.95	134.41
3	3.07	23.072	34.608	46.144	57.680	69.22	80.752	92.288	103.82	115.40	126.90	138.40	150.00	161.50	173.00	184.60	196.11	207.65
3.5	3.55	30.851	46.276	61.702	77.127	92.55	107.98	123.40	138.83	154.30	169.68	185.10	200.50	216.00	231.40	246.80	262.23	277.66
4	4.03	39.758	59.636	79.515	99.394	119.3	139.15	159.03	178.91	198.80	218.67	238.50	258.40	278.30	298.20	318.10	337.94	357.82
5	5.05	62.430	93.645	124.86	156.07	187.3	218.50	249.72	280.93	312.10	343.36	374.60	405.80	437.00	468.20	499.40	530.65	561.87
6	6.06	89.899	134.85	179.80	224.75	269.7	314.65	359.60	404.55	449.50	494.45	539.40	584.30	629.30	674.20	719.20	764.14	809.09
8	7.98	155.89	233.83	311.78	389.72	467.7	545.61	623.56	701.50	779.40	857.39	935.30	1013.0	1091.0	1169.0	1247.0	1325.1	1403.0
10	10.02	245.78	368.67	491.56	614.45	737.3	860.23	983.12	1106.0	1229.0	1351.8	1475.0	1598.0	1720.0	1843.0	1966.0	2089.1	2212.0
12	11.94	348.99	523.49	697.99	872.49	1047.0	1221.5	1396.0	1570.5	1745.0	1919.5	2094.0	2268.0	2443.0	2617.0	2792.0	2966.5	3141.0
14	13.13	422.03	633.04	844.05	1055.1	1266.0	1477.1	1688.1	1899.1	2110.0	2321.1	2532.0	2743.0	2954.0	3165.0	3376.0	3587.2	3798.2
16	15.00	550.80	826.20	1101.6	1377.0	1652.0	1927.8	2203.2	2478.6	2754.0	3029.4	3305.0	3580.0	3856.0	4131.0	4406.0	4681.8	4957.2

FPS TO GPM: GPM = (PIPE ID)^2 X VELOCITY IN FPS X 2.45

GPM TO FPS: $FPS = \frac{GPM}{(ID)^2 \times 2.45}$

FPS X .3048 = MPS

GPM X .0007 = GPD

GPM X 3.7878 = LPM

DYNASONICS

FPS TO GPM CROSS - REFERENCE (Schedule 40)

Nominal Pipe (Inches)	I.D. INCH	1	1.5	2	2.5	3	3.5	4	4.5	5	5.5	6	6.5	7	7.5	8	8.5	9
18	16.88	697.52	1046.3	1395.0	1743.8	2093.0	2441.3	2790.1	3138.8	3488.0	3836.3	4185.0	4534.0	4883.0	5231.0	5580.0	5928.9	6277.7
20	18.81	866.14	1299.0	1732.0	2165.3	2598.4	3031.5	3464.6	3897.6	4330.7	4763.8	5196.8	5629.9	6063.0	6496.0	6929.1	7362.2	7795.3
24	22.63	1253.7	1880.0	2507.0	3134.1	3761.0	4387.8	5014.6	5641.5	6268.3	6895.1	7522.0	8148.8	8775.6	9402.4	10029	10656	11283
26	25.25	1560.7	2341.0	3121.0	3901.9	4682.2	5462.6	6243.0	7023.4	7803.7	8584.1	9364.5	10145	10925	11706	12486	13266	14047
28	27.25	1817.8	2727.0	3636.0	4544.5	5453.4	6362.3	7271.2	8180.0	9088.9	9997.8	10907	11816	12725	13633	14542	15451	16360
30	29.25	2094.4	3142.0	4189.0	5236.0	6283.2	7330.4	8377.6	9424.9	10472	11519	12566	13614	14661	15708	16755	17803	18850
32	31.25	2390.6	3586.0	4781.0	5976.5	7171.9	8367.2	9562.5	10758	11953	13148	14344	15539	16734	17930	19125	20320	21516
34	33.25	2706.4	4060.0	5413.0	6766.0	8119.2	9472.4	10826	12179	13532	14885	16238	17592	18945	20298	21651	23004	24358
36	35.25	3041.8	4563.0	6084.0	7604.5	9125.4	10646	12167	13688	15209	16730	18251	19772	21292	22813	24334	25855	27376
42	41.25	4165.4	6248.0	8331.0	10414	12496	14579	16662	18744	20827	22910	24992	27075	29158	31241	33323	35406	37489
48	47.99	5637.8	8457.0	11276	14095	16913	19732	22551	25370	28189	31008	33827	36646	39465	42284	45103	47922	50740
54	53.98	7133.1	10700	14266	17833	21399	24966	28532	32099	35665	39232	42798	46365	49931	53498	57065	60631	64198
60	60.09	8839.2	13259	17678	22098	26518	30937	35357	39777	44196	48616	53035	57455	61875	66294	70714	75134	79553
72	72.10	12726	19089	25451	31814	38177	44540	50903	57266	63628	69991	76354	82717	89080	95443	101805	108168	114531
84	84.10	17314	25971	34628	43285	51943	60600	69257	77914	86571	95228	103885	112542	121199	129856	138514	147171	155828

FPS TO GPM: GPM = (PIPE ID)^2 X VELOCITY IN FPS X 2.45

GPM TO FPS: $FPS = \frac{GPM}{(ID)^2 \times 2.45}$

FPS X .3048 = MPS

GPM X .0007 = GPD

GPM X 3.7878 = LPM

Fluid Sound Speeds

Original Date: 10/19/99
Revision: none
Revision Date: none
File: I:/dynasonics/dyna_code/tables/doppler ss conversions.xls

120.0176921

Fluid	Specific Gravity 20 degrees C	Sound Speed m/s	Sound Speed ft/s	Doppler Calibration Entry relative to 25C water
Acetate, Butyl (n)		1270	4163.9	85
Acetate, Ethyl	0.901	1085	3559.7	72
Acetate, Methyl	0.934	1211	3973.1	81
Acetate, Propyl		1280	4196.7	85
Acetone	0.79	1174	3851.7	78
Alcohol	0.79	1207	3960.0	81
Alcohol, Butyl (n)	0.83	1270	4163.9	85
Alcohol, Ethyl	0.83	1180	3868.9	79
Alcohol, Methyl	0.791	1120	3672.1	75
Alcohol, Propyl (I)		1170	3836.1	78
Alcohol, Propyl (n)	0.78	1222	4009.2	82
Ammonia (35)	0.77	1729	5672.6	115
Anlline (41)	1.02	1639	5377.3	109
Benzene (29,40,41)	0.88	1306	4284.8	87
Benzol, Ethyl	0.867	1338	4389.8	89
Bromine (21)	2.93	889	2916.7	59
n-Butane (2)	0.60	1085	3559.7	72
Butyrate, Ethyl		1170	3836.1	78
Carbon dioxide (26)	1.10	839	2752.6	56
Carbon tetrachloride	1.60	926	3038.1	62
Chloro-benezene	1.11	1273	4176.5	85
Chloroform (47)	1.49	979	3211.9	65
Diethyl ether	0.71	985	3231.6	66
Diethyl Ketone		1310	4295.1	87
Diethylene glycol	1.12	1586	5203.4	106
Ethanol	0.79	1207	3960.0	81
Ethyl alcohol	0.79	1207	3960.0	81
Ether	0.71	985	3231.6	66
Ethyl ether	0.71	985	3231.6	66
Ethylene glycol	1.11	1658	5439.6	111
Freon R12		774.2	2540	52
Gasoline	0.7	1250	4098.4	83
Glycerin	1.26	1904	6246.7	127
Glycol	1.11	1658	5439.6	111
Isobutanol	0.81	1212	3976.4	81
Iso-Butane		1219.8	4002	81
Isopentane (36)	0.62	980	3215.2	65
Isopropanol (46)	0.79	1170	3838.6	78
Isopropyl alcohol (46)	0.79	1170	3838.6	78
Kerosene	0.81	1324	4343.8	88
Linalool		1400	4590.2	93

Linseed Oil	.925-.939	1770	5803.3	118
Methanol (40,41)	0.79	1076	3530.2	72
Methyl alcohol (40,44)	0.79	1076	3530.2	72
Methylene chloride (3)	1.33	1070	3510.5	71
Methylethyl Ketone		1210	3967.2	81
Motor Oil (SAE 20/30)	.88-.935	1487	4875.4	99
Octane (23)	0.70	1172	3845.1	78
Oil, Castor	0.97	1477	4845.8	99
Oil, Diesel	0.80	1250	4101	83
Oil (Lubricating X200)		1530	5019.9	102
Oil (Olive)	0.91	1431	4694.9	96
Oil (Peanut)	0.94	1458	4783.5	97
Paraffin Oil		1420	4655.7	95
Pentane	0.626	1020	3346.5	68
Petroleum	0.876	1290	4229.5	86
1-Propanol (46)	0.78	1222	4009.2	82
Refrigerant 11 (3,4)	1.49	828.3	2717.5	55
Refrigerant 12 (3)	1.52	774.1	2539.7	52
Refrigerant 14 (14)	1.75	875.24	2871.5	58
Refrigerant 21 (3)	1.43	891	2923.2	59
Refrigerant 22 (3)	1.49	893.9	2932.7	60
Refrigerant 113 (3)	1.56	783.7	2571.2	52
Refrigerant 114 (3)	1.46	665.3	2182.7	44
Refrigerant 115 (3)		656.4	2153.5	44
Refrigerant C318 (3)	1.62	574	1883.2	38
Silicone (30 cp)	0.99	990	3248	66
Toluene (16,52)	0.87	1328	4357	89
Transformer Oil		1390	4557.4	93
Trichlorethylene		1050	3442.6	70
1,1,1-Trichloro-ethane	1.33	985	3231.6	66
Turpentine	0.88	1255	4117.5	84
Water, distilled (49,50)	0.996	1498	4914.7	100
Water 0 degrees C		1402	4596.7	94
Water 20 degrees C		1482	4859.0	99
Water 40 degrees C		1529	5013.1	102
Water 60 degrees C		1551	5085.2	103
Water 80 degrees C		1554	5095.1	104
Water 100 degrees C		1543	5059.0	103
Water 120 degrees C		1519	4980.3	101
Water 140 degrees C		1485	4868.9	99
Water 160 degrees C		1440	4721.3	96
Water 180 degrees C		1390	4557.4	93
Water 200 degrees C		1333	4370.5	89
Water, heavy	1	1400	4593	93
Water, sea	1.025	1531	5023	102
Wood Alcohol (40,41)	0.791	1076	3530.2	72
m-Xylene (46)	0.868	1343	4406.2	90
o-Xylene (29,46)	0.897	1331.5	4368.4	89
p-Xylene (46)		1334	4376.8	89

THIS ASSEMBLY IS FACTORY MUTUAL APPROVED FOR:
"CLASS I, II, III, DIVISION 1,
GROUPS A THRU G,
HAZARDOUS LOCATION"—
WHEN INSTALLED PER THIS DRAWING.

FIELD WIRING PARAMETERS:		
MAXIMUM FIELD WIRING		
GROUPS	CAPACITANCE (nF)*	INDUCTANCE (mH)*
A,B,C,D,E,F,G	28	0.3
C,D,E,F,G	43	2.4
D,G	118	4.5

* PER CONDUCTOR PAIR

MODEL:
QTY: PO#: WO#:
CONTRACT/PROJECT#:
TAG#:
CUSTOMER:
ENGINEER:
END USER:
OPTIONS:

SPECIAL INSTRUCTIONS:

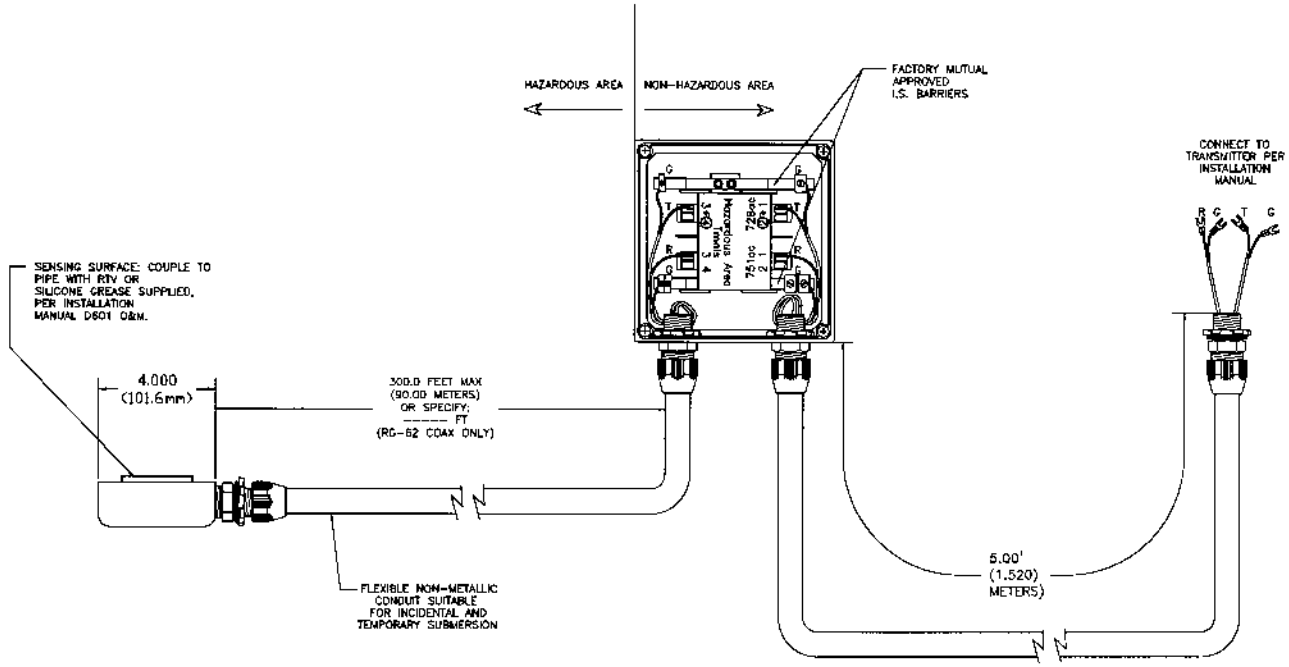

5. INSTALLATION SHALL BE IN ACCORDANCE WITH THE NATIONAL ELECTRICAL CODE (ANSI / NFPA 70) AND THE ANSI / ISA RP12.6 INSTALLATION OF INTRINSICALLY SAFE SYSTEMS FOR HAZARDOUS (CLASSIFIED) LOCATIONS.
4. EQUIPMENT CONNECTING TO BARRIERS SHALL NOT USE NOR GENERATE IN EXCESS OF 250Vrms.
5. [illegible]
6. [illegible]
7. REMOVE ALL BURRS AND SHARP EDGES [illegible]

NOTES UNLESS STANDARD SPECIFIED

REVISIONS

ZONE	LTR	DESCRIPTION	EFF.	DATE	APPROVED
ALL	C	1. CHANGED TO CURRENT TITLE BLOCK 2. MADE C DWG DRAWING	-	0-13-00	

THIS IS AN "FMRC" CONTROLLED DRAWING.
NO CHANGES WITHOUT PRIOR "FMRC" APPROVAL

UNLESS OTHERWISE SPECIFIED DIMENSIONS ARE IN INCHES TOLERANCE ON DECIMALS .00 ±.010, .000 ±.005 ANGLES ±1/2°

SEE ABOVE

DRAWN BY	E. PARR	03-7-00
CHECKED BY		
ENGINEER		
SCALE BY	E. PARR	03-13-00
APPROVED BY		
DATE		

3-D DRAWING WAS DONE ON AUTOCAD AND CAN ONLY BE MADE IN A AUTOCAD SYSTEM ANY MANUAL CHANGES DONE TO THE DRAWING WILL BE VOIDED UNLESS AUTHORIZED.

DYNASONICS 1000 Bank Street Xenia, OH 45385 (937) 426-8526

TITLE: T-600-HF-ST-XXX-ISB
T-600-HF-XXX-ISB, OUTLINE DWG

SIZE	CODE I.D. NO.	PART NUMBER
D	59380	D091-1047-000

SCALE: NONE | CURRENT REV: C | SHEET: 1 OF 1

PART NUMBER D091-1047-000

THIS ASSEMBLY IS FACTORY MUTUAL APPROVED FOR:
"CLASS I, II, III, DIVISION 1,
GROUPS A THRU G,
HAZARDOUS LOCATION"–
WHEN INSTALLED PER THIS DRAWING.

FIELD WIRING PARAMETERS:		
MAXIMUM FIELD WIRING		
GROUPS	CAPACITANCE (nF)*	INDUCTANCE (mH)*
A,B,C,D,E,F,G	28	0.3
C,D,E,F,G	43	2.4
D,G	118	4.5

* PER CONDUCTOR PAIR

MODEL:
QTY: PO#: WO#:
CONTRACT/PROJECT#:
TAG#:
CUSTOMER:
ENGINEER:
END USER:
RATE INDICATOR: 4.5 DIGIT LCD DISPLAY
OR:
TOTALIZER:8 DIGIT LCD, NON-RESET(STD)
OR:
OPTIONS:
SPECIAL INSTRUCTIONS:

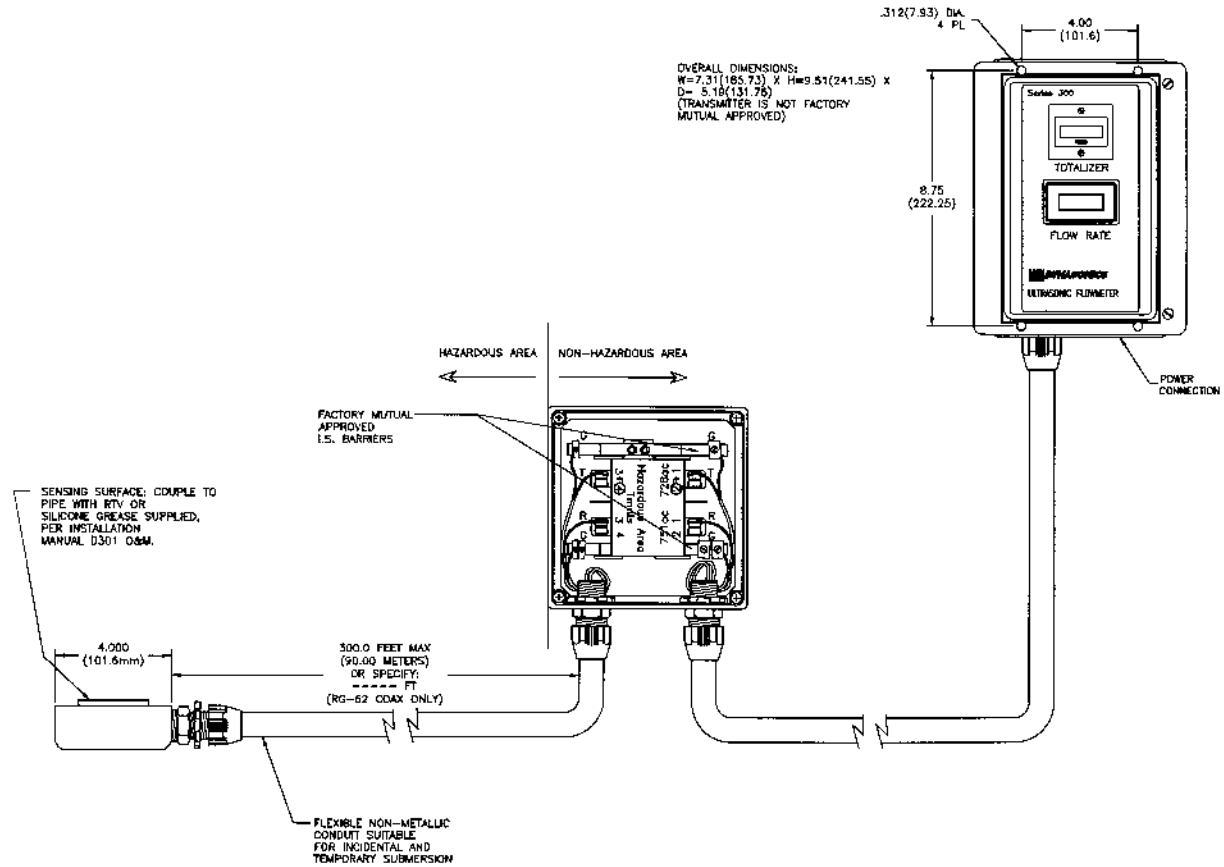

5. INSTALLATION SHALL BE IN ACCORDANCE WITH THE NATIONAL ELECTRICAL CODE (ANSI / NFPA 70) AND THE ANSI / ISA RP12.6 INSTALLATION OF INTRINSICALLY SAFE SYSTEMS FOR HAZARDOUS (CLASSIFIED) LOCATIONS.
4. EQUIPMENT CONNECTING TO BARRIERS SHALL NOT USE NOR GENERATE IN EXCESS OF 250Vrms.
3. [illegible]
2. FINISH TO BE [illegible]
1. REMOVE ALL BURRS AND BREAK SHARP EDGES [illegible]

NOTES UNLESS OTHERWISE SPECIFIED

REVISIONS

ZONE	LTR	DESCRIPTION	E.C.O.	DATE	APPROVED
ALL	C	1. CHANGES TO CURRENT TITLE BLOCK	-	10-5-99	
		2. [illegible]	-	10-5-99	

THIS IS AN "FMRC" CONTROLLED DRAWING.
NO CHANGES WITHOUT PRIOR "FMRC" APPROVAL.

DYNASONICS

SERIES 300 I.S.
ENC OUTLINE DRAWING

SIZE: D | CODE I.D. NO. 59380 | DWG NUMBER D091-1047-002

SCALE: NONE | CURRENT REV: C | SHEET: 1 OF 1

D091-1047-002

SEE ABOVE

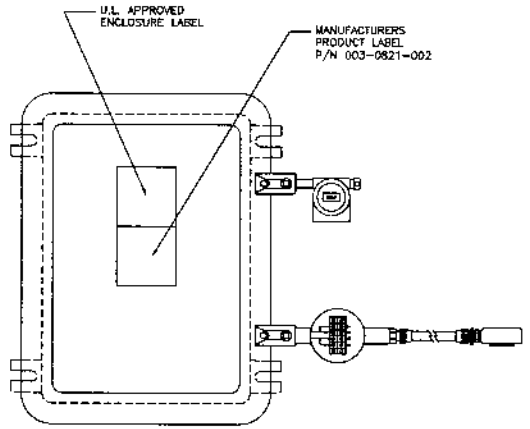

1/2" NPT THRD (TYP) ALL CONDUIT OPENINGS SHALL ALLOW A PLUG GAUGE TO ENTER – 1/2 TO 3 1/2 TURNS PAST THE L1 NOTCH. ALL NPT THREAD CONNECTIONS SHALL BE ENGAGED A MINIMUM OF 5 FULL TURNS. FIELD WIRING CONNECTIONS– CUSTOMER MUST INSTALL AN EP APPROVED CONDUIT SEAL WITHIN 3' OF ENCLOSURE ENTRANCE.

THIS ASSEMBLY IS FACTORY MUTUAL APPROVED FOR:
"CLASS I, II, III, DIVISION 1
GROUPS A THRU G,
HAZARDOUS LOCATION"–
WHEN INSTALLED PER THIS DRAWING.

MODEL:
QTY: PO#: WO#:
CONTRACT/PROJECT#:
TAG#:
CUSTOMER:
ENGINEER:
END USER:
OPTIONS:

SPECIAL INSTRUCTIONS:

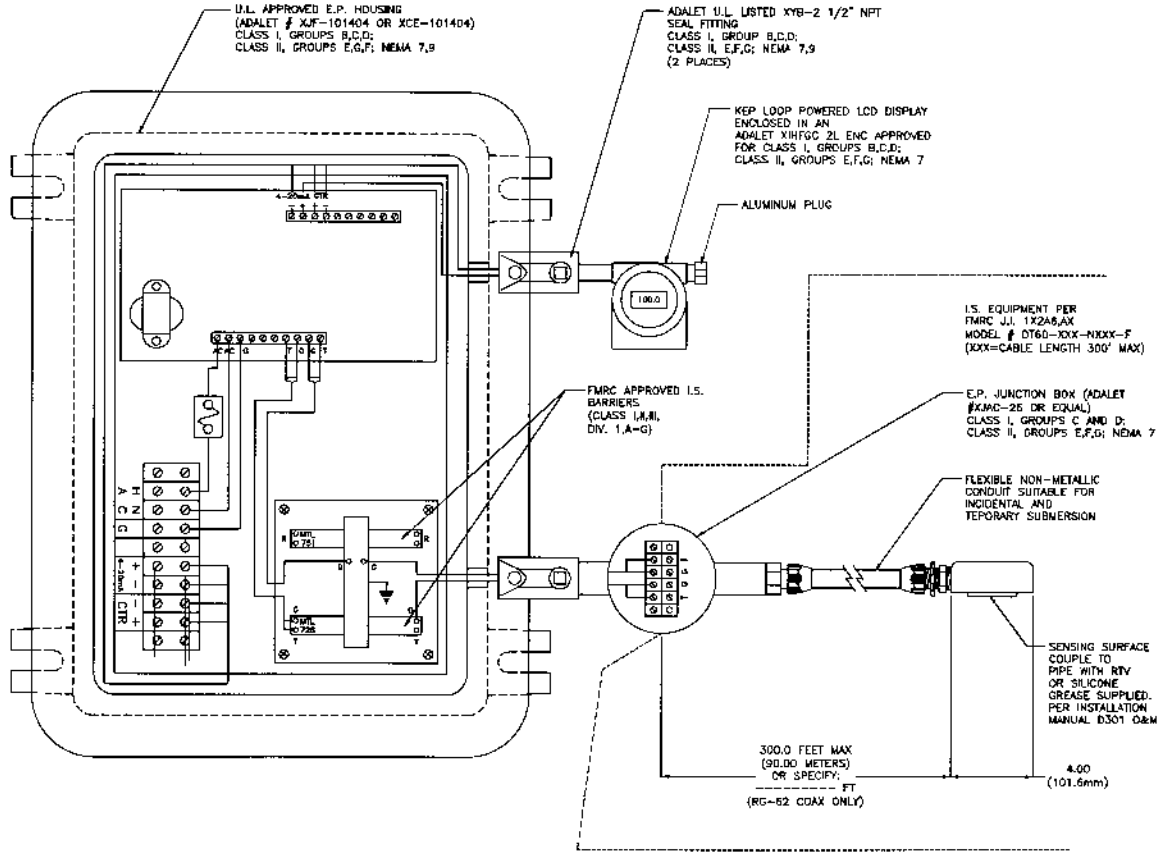

120 VAC FUSE 1/16A SLO-BLO
240 VAC FUSE 1/16A SLO-BLO
12 VAC FUSE 3/10A SLO BLO
24 VAC FUSE 3/10A SLO-BLO

THIS IS AN "FMRC" CONTROLLED DRAWING.
NO CHANGES WITHOUT PRIOR "FMRC" APPROVAL.

DYNASONICS

SERIES 300 I.S
ENC OUTLINE DRAWING

SIZE D | CODE I.D. NO. 59380 | PART NUMBER D094-1002-001

SCALE: NONE | CURRENT REV: C | SHEET: 1 OF 1

DWG NUMBER D094-1002-001

	TP-2	1 MHz 15 -30 V p-p (scope: 1 microsecond/cm)
	TP-3	1 MHz 1.5 -4 V p-p (scope: 1 microsecond/cm)
	TP-4	Doppler Signal 0.5 -1.5 V p-p (scope: 0.5 millisecond/cm) (1200 Hz Input)
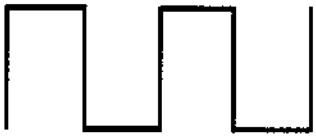	TP-5	Comp. Output 7 V p-p.
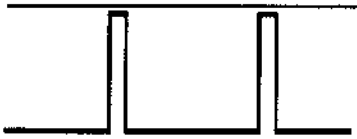	TP-6	Cal. Pulses = 100 microseconds pulse width 7 V p-p.
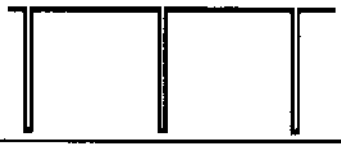	TP-10	V/F Pulses 1 millisecond Pulse width 7 V p-p. 50-500 milliseconds P.R.R. (1200 Hz Input)

NOTE: All waveforms shown originate from an injected signal. Test point 4 (T.P.4) actual field waveform will differ from the one shown.

The data, drawings, specifications, and other information contained herein is confidential and proprietary with Dynasonics, Inc. and shall not be duplicated, disclosed, used to produce articles, or used for any other purposes other than that authorized in writing by Dynasonics, Inc.

DYNASONICS™

REV: 3/7/96	DWG. BY: J.S. GRAY
TITLE: SERIES 300 WAVEFORMS	
DATE: 11/17/81	DWG#: 091-1048-102

APPLICATION NOTE

MULTIPLE UNIT ACOUSTIC CROSS TALK INTERFERENCE

If you have verified through our service department that you have a number of 300 units installed on a multiple trunk header piping system, or you have transducers of multiple units mounted in close proximity of each other, this problem may occur. The problem is caused by acoustic waves traveling through the pipe wall from one set of transducers to another.

The solution to this problem appears complicated, but is really quite simple. What the modification does is use one transmitter to drive two transmit transducers, thus making them perfectly tuned. This makes any cross talk to the transmitting transducers in sync and it disappears. Only two 300 units can be ganged together, if there are more than two 300 transmitters with this problem they can be grouped in three groups of two, or six (6) units total.

TURN OFF POWER TWO BOTH UNITS BEFORE CONTINUING!!

To gang two 300 units together, a coax cable must be run between the transmit T, and G, terminals on the terminal block of one unit to the transmit T, and G, terminal on the second unit. To interrupt the second units transmit signal one leg of resistor R4 must be cut and the resistor body raised to terminate its' connection to the p. c. board. R4 is located just above the transducer terminal block. After power has been restored the P-P ADJUST, pot R40 on the master P.C.B. must be readjusted for 10.0 volts at TP12. If additional 300 pairs are present the frequency coils must be de-tuned, consult the factory for this procedure. If this fails to solve the problem, contact our service department.

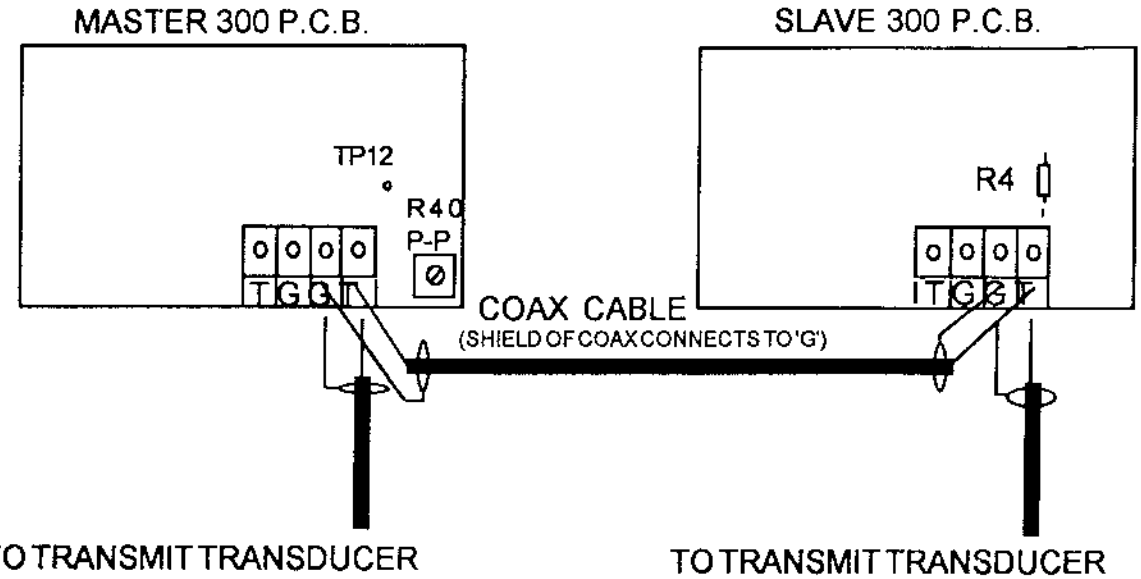

522 WEST 5TH AVE • NAPERVILLE, IL 60563-2901 U.S.A. • TEL: 630.355.3055 • FAX: 630.355.9408